Connector Location A

Connector Location B

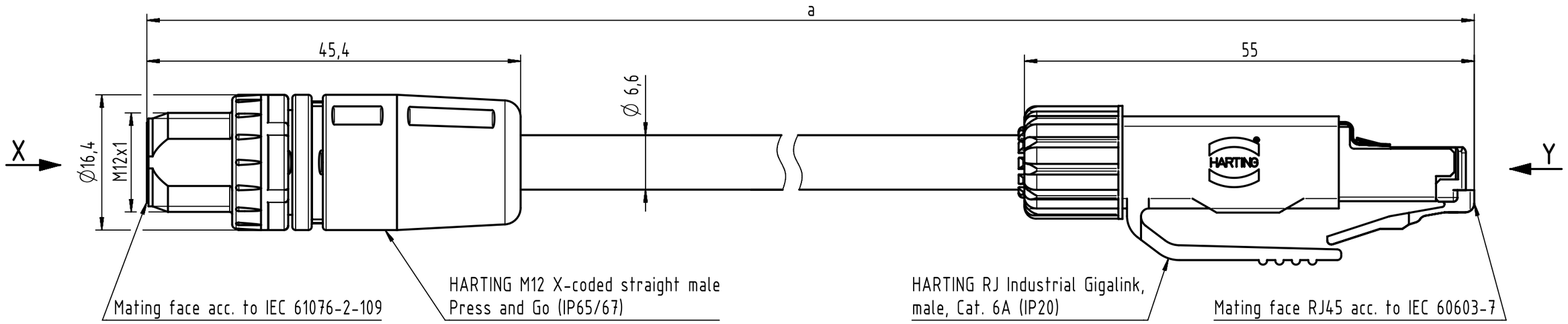

Loading-Plan

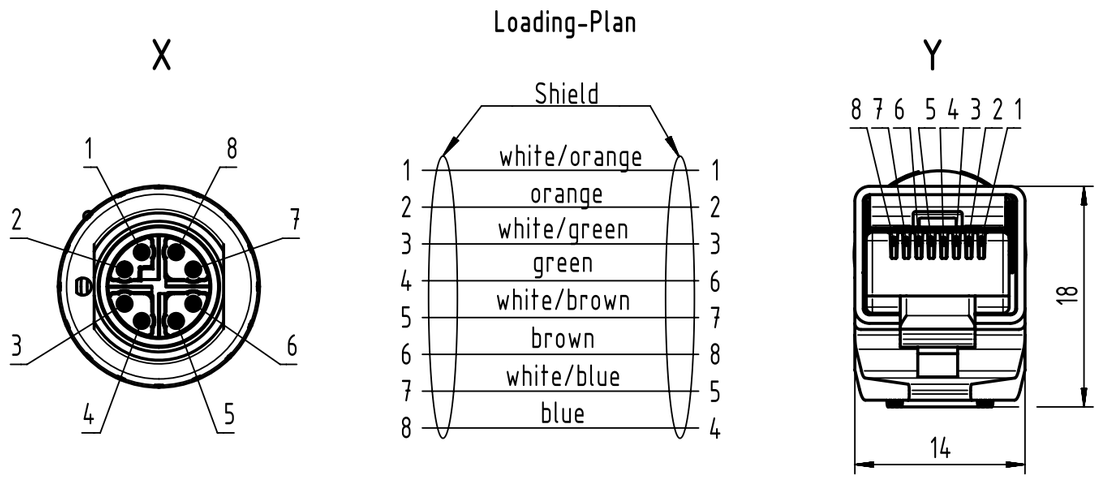

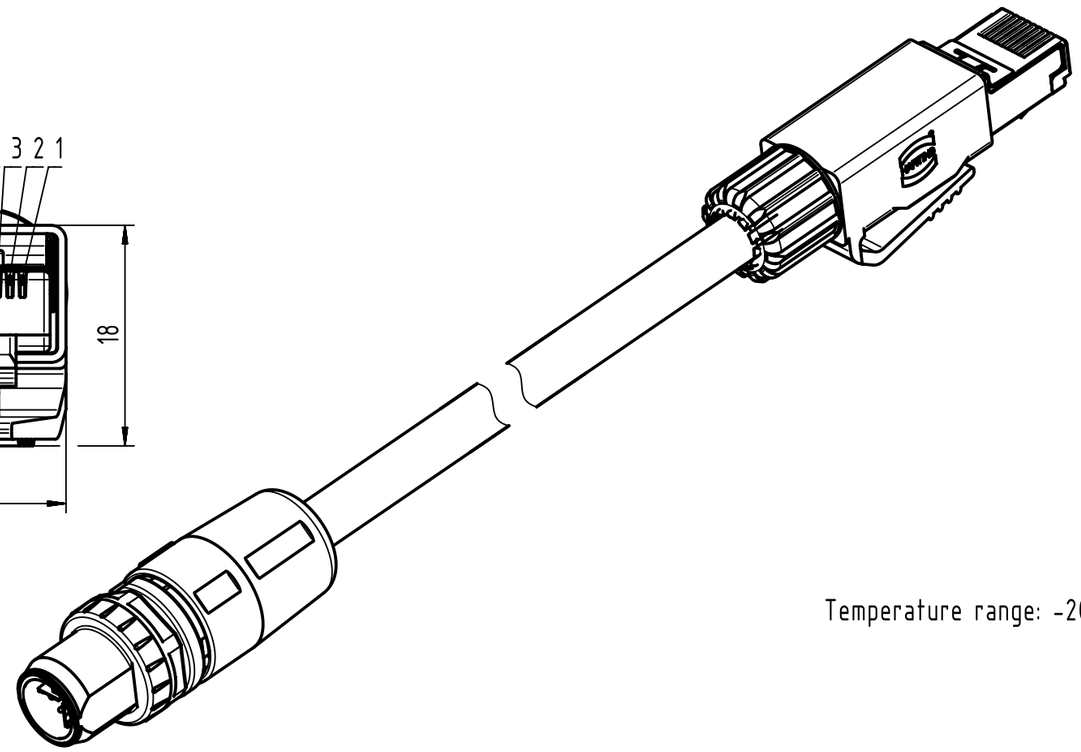

Temperature range: -20°C...+70°C

Cont. no.	Part - no.	Type of cable	Dim. a[m]
3	For additional lengths please refer to drawing TB 09489323757XXX		
2	09478411002	RJI Ethernet stranded cable, AWG 26/7, 4x2x0.5/1.0, Cat. 6A, PVC, yellow	2
1	09478411001		1

All Dimensions in mm | Tech. Character. | Free size tol. | According to production drawing 2017-02-23

All rights reserved

Department HCS - RO

HARTING Customised Solutions
D-32427 Minden

Created by	Inspected by	Standardisation	Date	State
COSTEA	MUNTEANV	AVRAM	2017-02-24	Final Release

Title: M12 X-coded Cable Assembly

Doc-Key / ECM-Nr.: 100601686/UGD/000/D 500000116128

Type: TB | Number: 094784110XX | Rev.: D | Page: 1/1

A3